> SOLUTION READY

Aptella
AUTOMATION +
POSITIONING TECH

SITEX

Onboarding Resources

Machine Control Handbook

Sitex Landing Webpage

Easy access landing page using the QR Code below or link - https://www.aptella.com/sitex/

Add this webpage to your bookmarks on your web browser and **add as an app on your phone** for ease of use!

NSW Key Services Contacts

Repair & Maintenance

Spare Parts (Front Counter) 02 9714 0000 (Option 2)

Field Service 02 9714 0000 (Option 2)

> nswservice@aptella.com

Service Centre & Repairs 02 9714 0000 (Option 3)

> nswworkshop@aptella.com

Sales & Hire

Hire & Rental 02 9714 0000 (Option 4)

> nswhire@aptella.com

Sales 02 9714 0000 (Option 4)

> nswsales@aptella.com

Technical Support

Support Team 02 9714 0000 (Option 1)

> nswsupport@aptella.com

Training & Development

Aptella Academy – Customer Training

> nswcampustraining@aptella.com

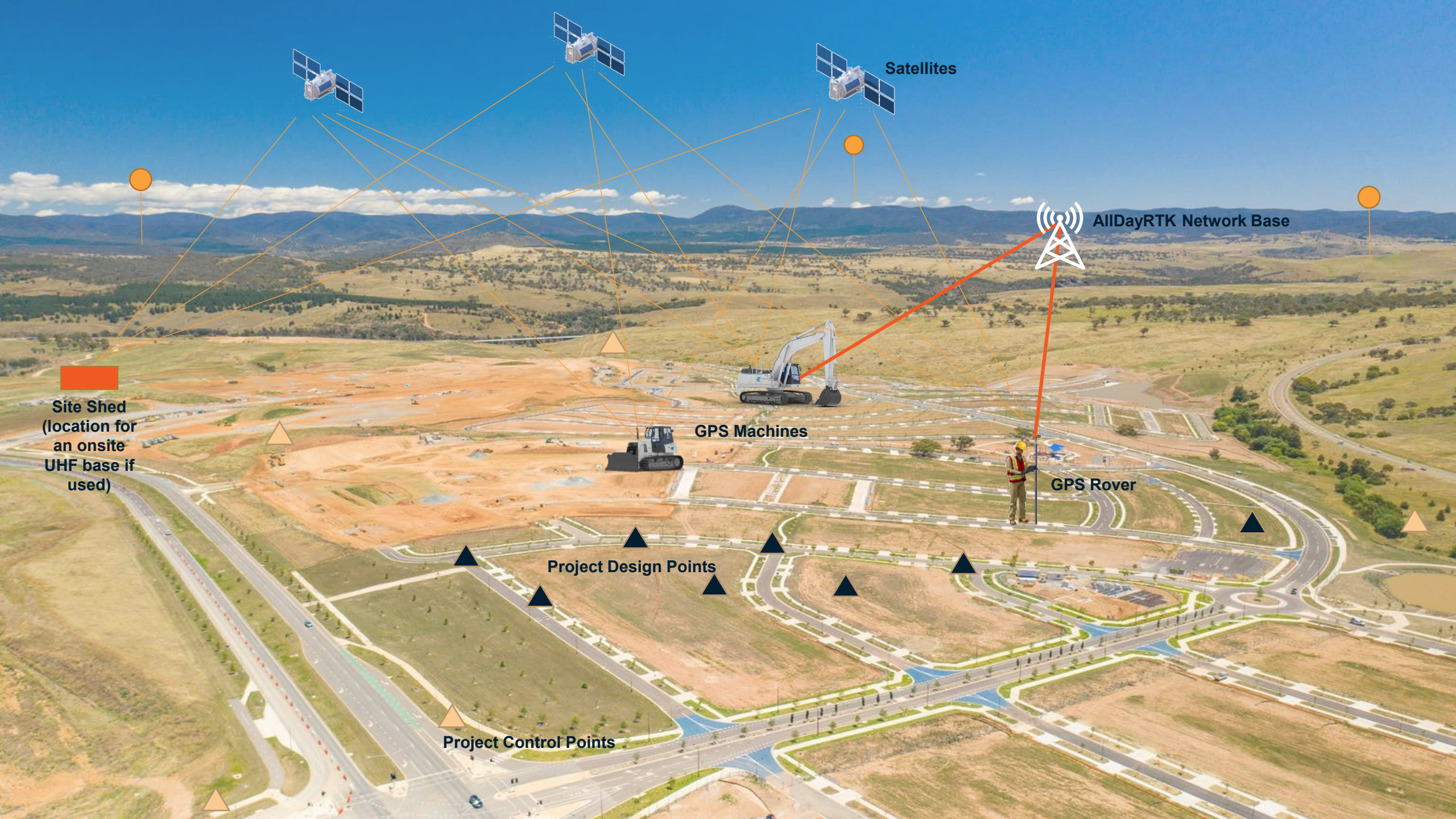
Satellites
AllDayRTK Network Base
Site Shed (location for an onsite UHF base if used)
GPS Machines
GPS Rover
Project Design Points
Project Control Points

Excavator Solutions

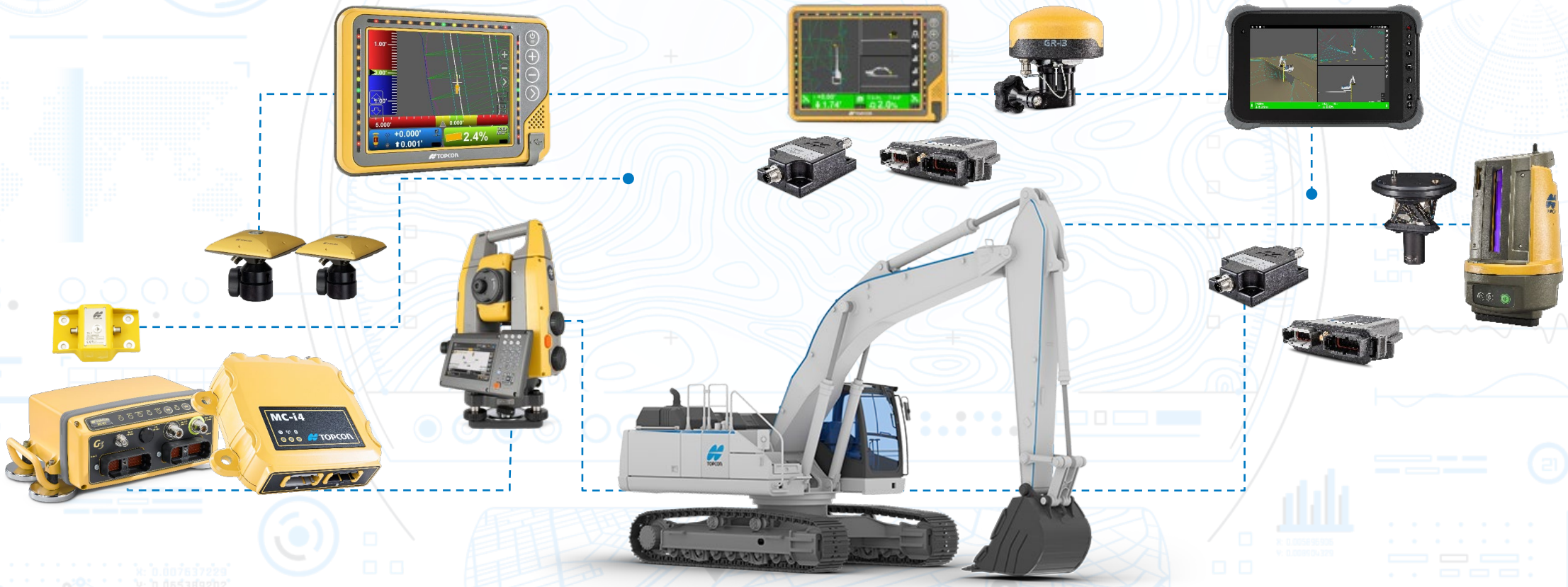

MC-Max Excavator – GNSS – Auto and indicate

- Accuracy (Tolerance): **+/- 20mm – General Earthworks Solution**
- Requires clear view of the sky, free from obstructions (buildings, trees, excavations) to track satellites
- Requires a correction to be received from a base station via Radio or Network (this enables the system to obtain 20mm precision)

tokara

POWERED BY Aptella AUTOMATION + POSITIONING TECH

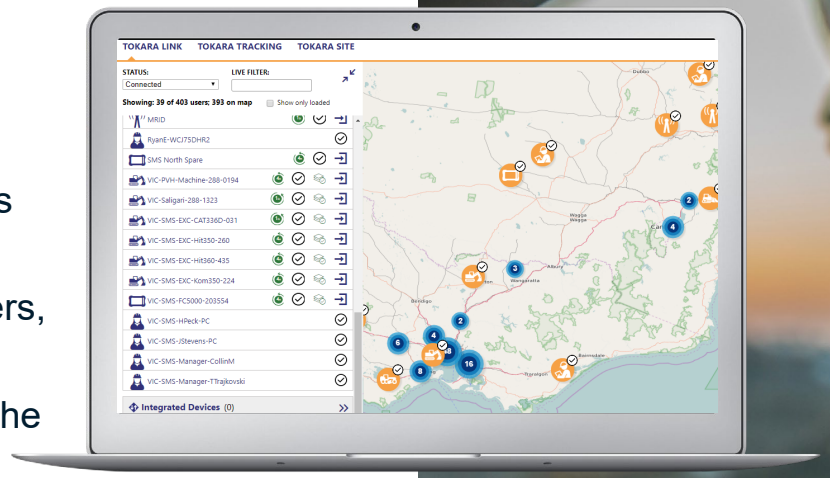

Tokara is the industry-leading remote access solution to manage everyone working to a design on site. Designed for project managers, surveyors, contractors and foremen, Tokara saves time and keeps everyone working to the right design at the click of a mouse.

Remote Access

- Connects to leading brands of positioning technology
- Location & connection status design file management

Visualisation

- See your project evolve with linework and drone imagery map overlays
- Quickly view and connect to field crew devices

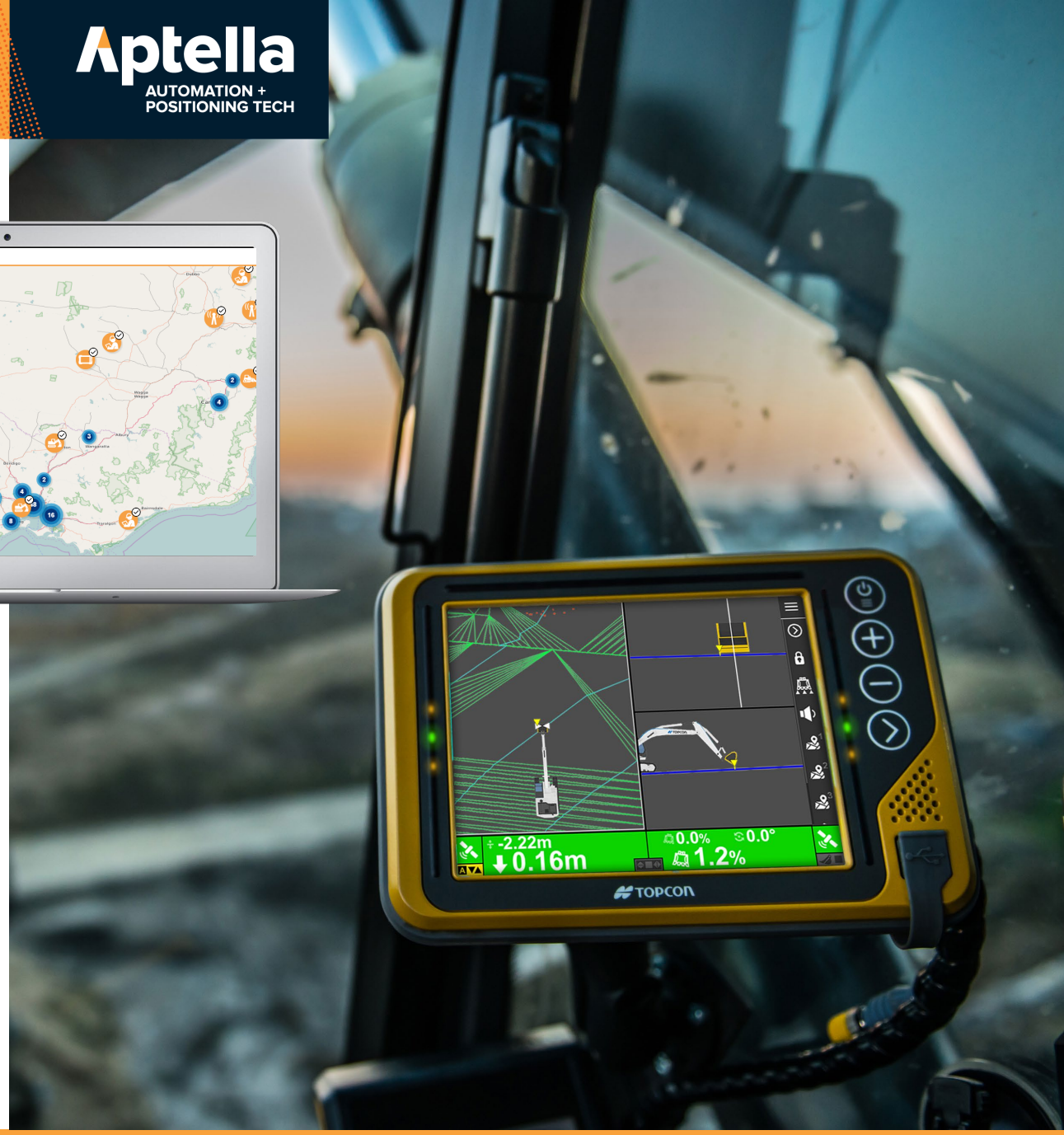

tokara

POWERED BY Aptella AUTOMATION + POSITIONING TECH

Realtime Locations

User list

- Advanced filters
- Icon indicators for status and type
- Panel hide for full screen map view once filter is set

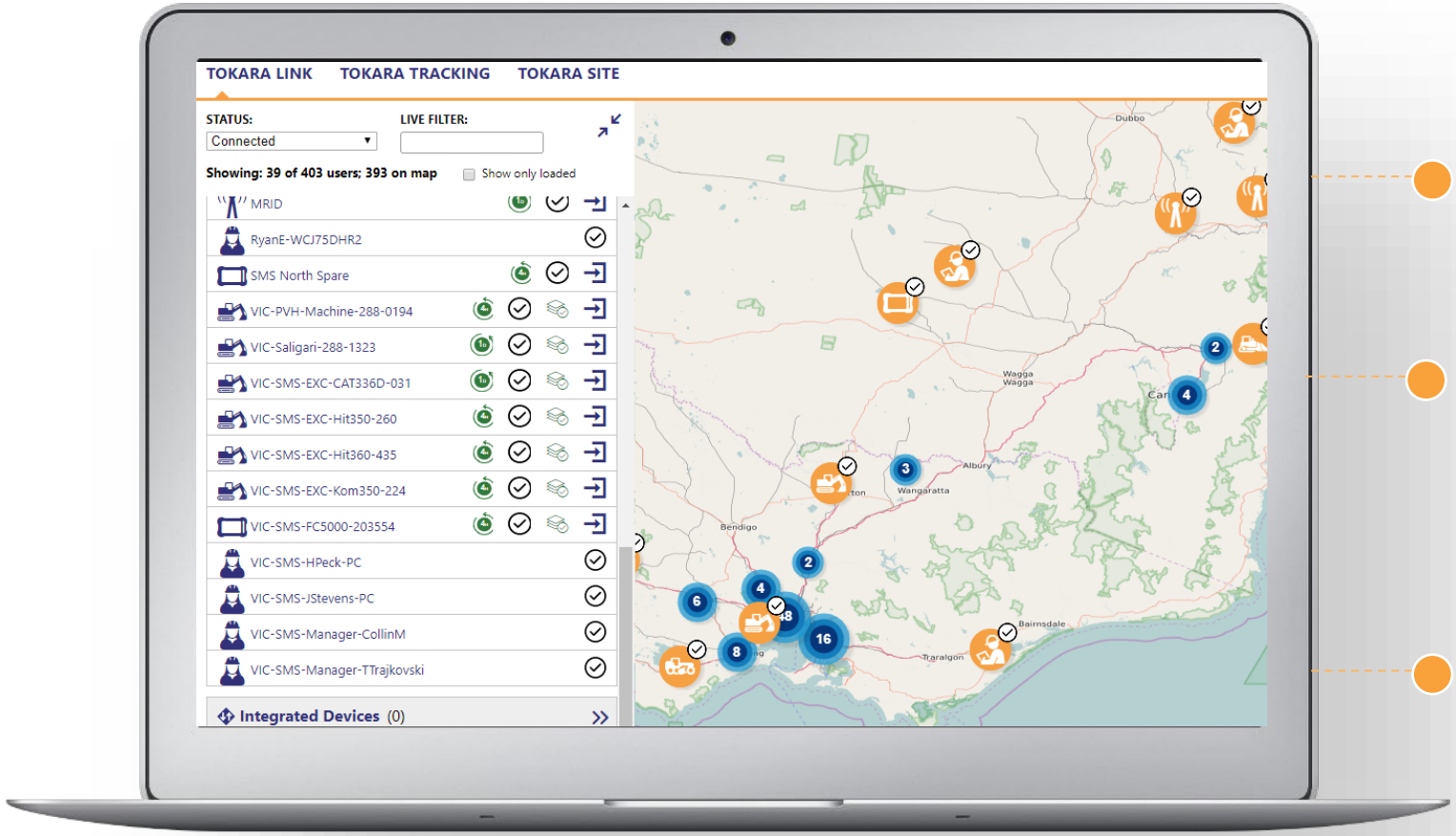

Managed RTK Bases

Base station location of owned and used RTK infrastructure

Multiple assets

Blue numbers indicate the location of multiple assets in close proximity. Zooming in will explode the positions.

User Types

Icons clearly identify the user type for immediate asset recognition

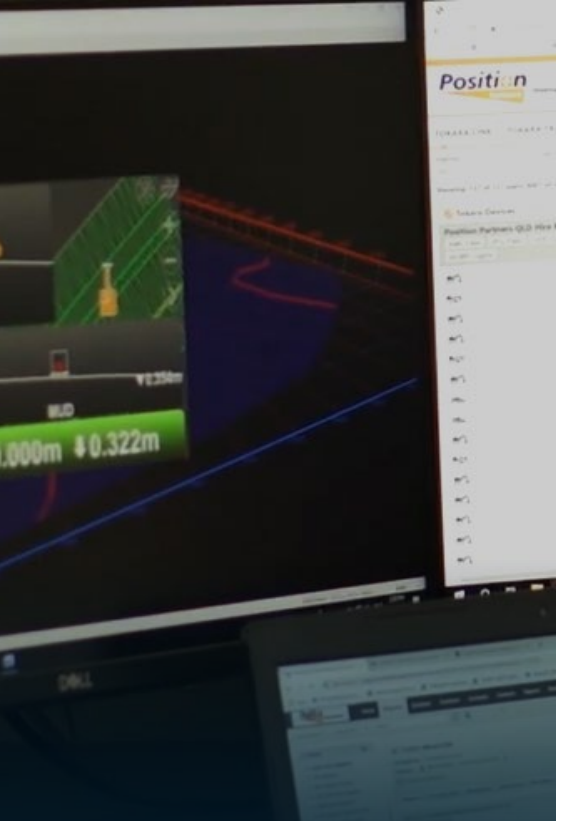

File Transfers

Manual and automated file transfers provide the ability to resolve support requests quickly and reliably.

To Machine

Frequency files, localisations, firmware, software, design updates are all facilitated with the secure transferring of data to the machine 3D system

tokara

From Machine

Saving files from the machine before critical updates or systems resets allows for the immediate restoration of all settings and machine calibrations for instant productivity

Support

File transfers are often used by our support teams to quickly resolve problems but can also be utilized by project data managers and companies to improve productivity.

Machine

Topcon, Trimble, Carson, Komatsu, Volvo and other 3D solutions can utilize the file transfer solution efficiently manage multiple brands.

RTK Correction Strength Mapping

UHF and Network corrections are still on of the most common causes for loss of productivity on a 3D construction site. Having the tools to mitigate poor GPS system design and network coverage can dramatically improve the 3D machine control outcomes.

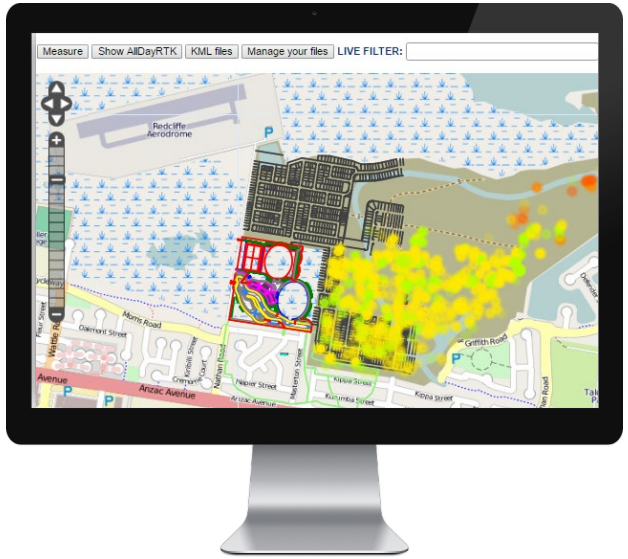

UHF

Using a UHF radio survey kit from Position Partners, the UHF signal strength, position and quality can all be mapped across a site.

As one of the largest support issues on a site, knowing what the coverage is can offer significant value in supporting 3D system on site.

CELLULAR

Using Tokara enabled devices the coverage quality of the Telstra network is automatically and accurately mapped across a project site to show localized coverage for planning and support.

Where Greenfield sites are being planned Telstra coverage maps can be used to provide an indication of expected coverage prior to a Tokara survey

Tokara Benefits

Project Manager

- Macro design file management
- Overall project productivity
- Resources management

Contractor

- Equipment utilisation
- Locations and tracking
- Support reporting

Operator

- Confidence in design files
- On demand support
- Safely operate

Foreman

- Latest design files
- On demand support

Surveyor

- Revision control
- Site setups
- Position quality
- Machine management

POWERED BY Aptella AUTOMATION + POSITIONING TECH

AllDayRTK

Enabling Geo-Precision

AllDayRTK records and distributes GNSS position correction information using a network of Continuously Operating Reference Stations (CORS). AllDayRTK is purpose-built to meet the rigour and quality required for the demanding tasks of all geospatial applications and civil infrastructure projects across Australia and New Zealand.

Australia Wide

AllDayRTK

AllDayRTK **PLUS**

AllDayRTK **RINEX**

Products

AllDayRTK **SITE**

AllDayRTK **FOCUS**

User Control

MiRTK

All Day RTK

Enabling Geo-Precision

Multiple brand support

TOPCON

Carlson
BREAK NEW GROUND

KOMATSU

HEXAGON | NovAtel

Trimble

CATERPILLAR

TERSUS GNSS

Hemisphere

ublox

HEXAGON | Leica Geosystems

Civil Construction Brochure

This can be added to the machine hire quote and proposal. Specific pages can be easily saved out of this PDF and attached (MC-Max Excavator page would be ideal as this is the system installed on your machines).

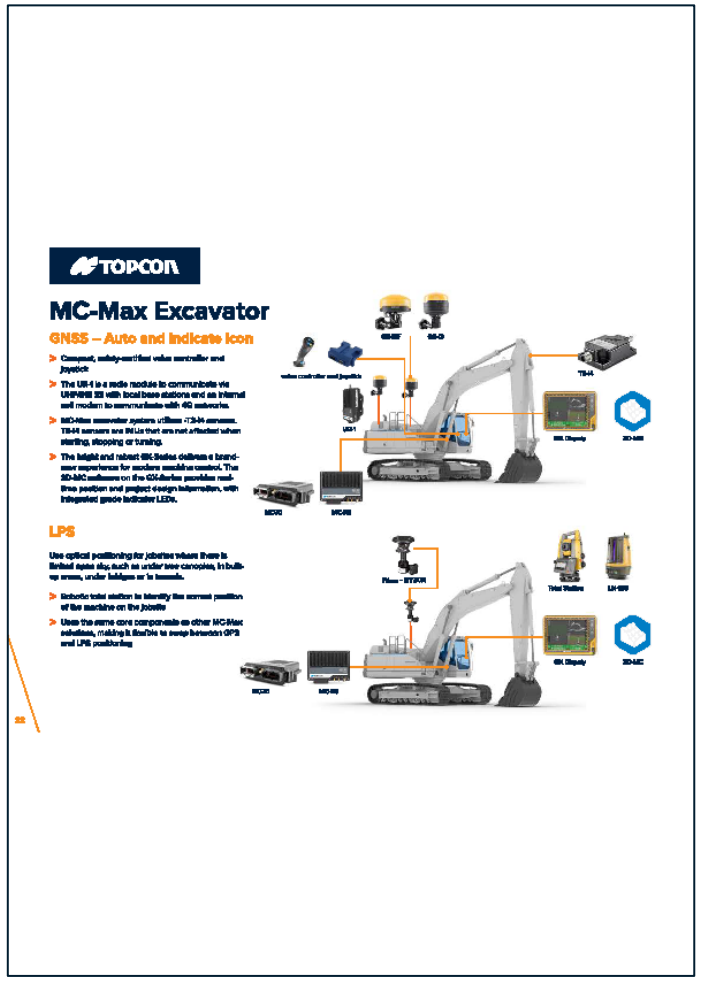

Workflow - Sales & Delivery of Rental

By following this strategy, you will effectively engage with the customer to discuss positioning, weighing & safety technology, providing a solution that addresses their specific requirements.

1

Qualification

Through the initial qualification stage of the process, we need to ascertain what the customer is trying to achieve and the application of the machine on the jobsite.

This will help us understand if GPS is the right fit for the job, or does the customer require a final trim or weighing solution. Identifying what the customer is seeking to get out of the system is the starting point.

2

Quantification

This stage is crucial in establishing the urgency of the customer's request for a machine hire with a technology system (working out what it is that needs to be delivered).

Aptella can help you work through this stage of asking the detailed questions to the customer around correction types and project files for the machine to work off. Ultimately, our goal is to empower you to understand what steps need to be taken to get to the end solution for the customer quickly (less things go wrong, when more people are aware of what to ask).

3

Delivery

The delivery stage involves understanding the expectations of the customer and how the machine will be deployed.

How we all work together to make sure the machine goes out on time and any changes to the timeline are identified to act upon promptly.

1 Qualification – Questions to Ask

Script – The questions to ask the customer, why we ask them and what the answers mean to the team.

> **What sort of work are you doing, do you need positioning technology on the machine?**
- *Establish application of machine on jobsite. What is the customer trying to achieve?*

> **Are you aware of how you could use positioning technology and how this can benefit you on the jobsite?**
- *Providing details on what purpose the customer is wanting to use a rental machine with GPS Technology for.*

> **What sort of results and tolerances are you trying to obtain?**
- *Understanding if GPS is the correct solution for the customers outcomes. Do they need a Final Trim System, Payload System (weighing), or safety solution?*
- *How are they confirming what they are doing is accurate? Is there a site surveyor or do they need a GPS rover?*

> **Do you have project data or designs for the job?**
- *Does the customer understand what is required to make the machine work and read accurately onsite?*

2 Quantification – Questions to Ask

Script – The questions to ask the customer, why we ask them and what the answers mean to the team.

> **Establish urgency. When does the machine/system need to be onsite and working?**
- *Establishing an end date for when all components of the GPS machine system need to be confirmed by.*
  - *Hire system fitted or with the machine*
  - *Buckets calibrated and loaded in the screen*
  - *Does the customer have a project file for the job?*
  - *Identified base correction (either customer is using the projects UHF/network license, or the network license that comes with the machine hire kit)*

> **Is this customer a subcontractor, or working on their own site?**

- *This will help identify if the customer can provide all site details themselves (base station information, project data, other specific requirements)*

> **Does the customer have their own designs and data for the project?**

- *We need to consider this straight away for the customer to source the project data prior to machine delivery*
- *It may be the case that the data needs to be sent to the regional Aptella Support Team for verification before loading into the machine system*

2 Quantification – Questions to Ask Cont..

> **Does the end customer require initial instruction and/or training on the hire system?**

- *Understanding the customers' ability with the technology. Do they have previous experience with GPS systems on an excavator, or are they new to positioning technology?*
- *How would the customer prefer to receive the training and support for using the machine with the technology?*

> **What is the customer using to obtain an RTK correction (accuracy)?**

- *Are you providing your own correction services (network license), or is there a UHF base station onsite?*
- *The hire system comes with a network license (AllDayRTK) included. We need to understand if the customer is aware of how he is receiving a base correction onsite.*
- *Does the customer need to hire a UHF base station?*

> **Are there any challenges, concerns or constraints we should be aware of?**

- *This will help identify any potential issues so we can achieve customer success sudden custom configurations and machine setups we may come across specific to the project*

3 Delivery – Questions to Ask

How we work together to make sure the machine goes out on time and any changes to the timeline are identified to act upon promptly.

> **Is the delivery date still the same from when first proposed?**

- *This keeps everyone on the same track, ensuring all requirements for the machine control are ready (Machine & buckets calibrated, Project file ready, correction type identified)*
- *Are these buckets calibrated to that specific machine? Do they need to be re-calibrated before the machine goes out?*

> **Is everything internally inline and checked off between the business and Aptella?**

- *Machine off-hire checked correctly, health check of machine before going out, any obvious damage?*
- *If we don't know we don't know. Aptella can work with you to amend any issues if we have time to plan and prepare*

> **Checking back in with the customer to confirm the machine is working and under control (support team check in, customer satisfaction)**

- *This can be a few days after delivery of machine, is there anything else the customer requires from our end?*

Key Rental Company MC Promo Rates

Machine Control (MC-X) System Rates

- STD MC Promo Discounted Rate – Key Rental Company
  - MC-X System = **$899.10pw**
- Long Term MC Promo Discounted Rate – Key Rental Company > 3 Months
  - MC-X System = **$719.28pw**

**if hire system requires an AllDayRTK license, add an additional $60/week to these hire rates*

Requirements for a Machine to Work

Calibrated Machine
(including attachments)

Base Correction

Project File

Requirements for a Machine to Work

1. Machine Calibrated & Accurate

- All GPS Machine Systems and Rovers are required to be calibrated before delivery to the customer
- This includes allocated buckets calibrated to the machine GPS system

2. Base Correction Established

- All GPS Machine Systems and Rovers are required to have a connection to a Base Station to receive the correct position onsite
- A base station correction can either be received via UHF or Network (AllDayRTK) communications

3. Data/Project file for the Jobsite

- All GPS Machine Systems and Rovers must reference to data in a project design file
- The customer must have a project file ready to put into the machine system (via Tokara or USB) for the jobsite they are working on

Supporting Systems

Total Stations

High accuracy optical positioning

- Accuracy (Tolerance): +/- 1-2mm
- Requires line of sight to the total station from the prism pole
- Solution for high precision grade & position checking

Survey Software Solutions

Design software to view and adjust project data

- 3D Office
- MAGNET Office

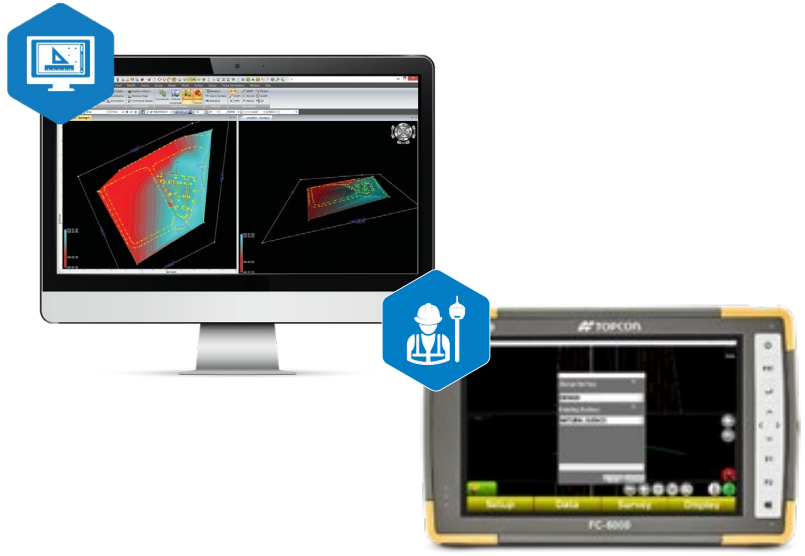

GNSS Rover

Grade checking solution that allows you to measure and verify project data

- Accuracy (Tolerance): +/- 20mm
- Requires clear view of the sky, free from obstructions (buildings, trees, excavations) to track satellites
- Setup as a Network Rover or UHF Base/Rover Solution

MC-Max Excavator – LPS

- Accuracy (Tolerance): **+/- 1-3mm – Final Trim Solution**
- Requires line of sight to the total station & recommended working range up to 150m from the instrument
- 1 Total Station per machine and no direct view to the sky needed for operation

Grader Solutions

MC-i4 / MC-R3

MC-Max

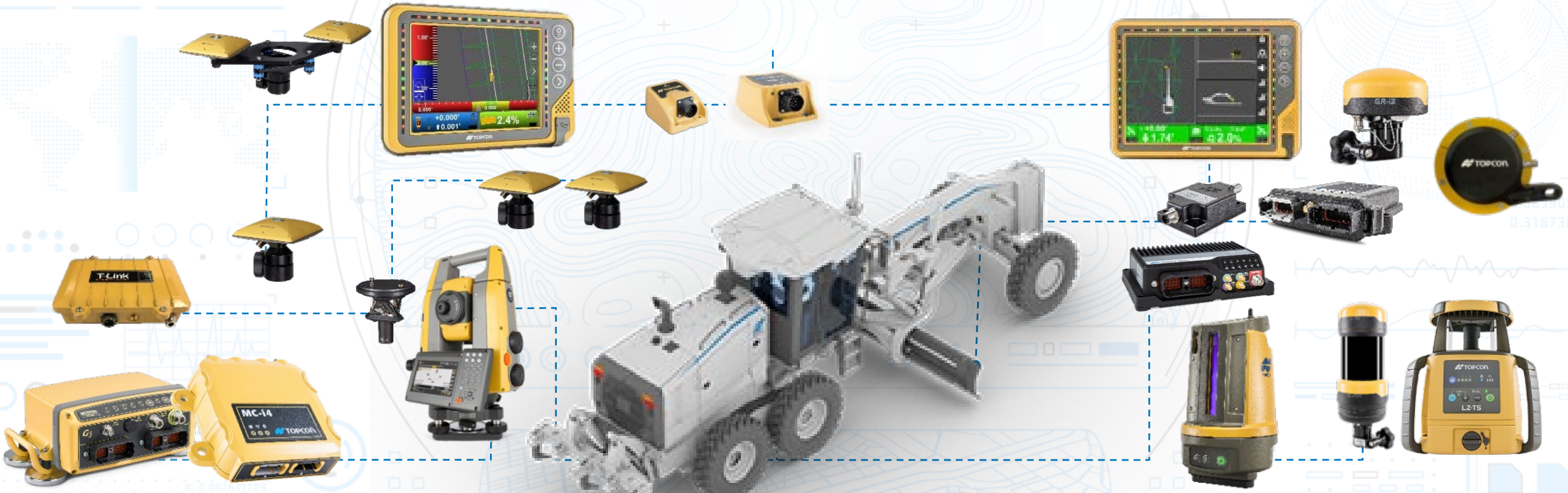

MC-Max Grader – GNSS Single/Dual

- Accuracy (Tolerance): **+/- 20mm – General Earthworks Solution**
- Requires clear view of the sky, free from obstructions (buildings, trees, excavations) to track satellites
- Requires a correction to be received from a base station via Radio or Network (this enables the system to obtain 20mm precision)
- This system allows the operator to roll the blade +/-15° when trimming (help manage material movement and placement)

MC-Max Grader – LPS

- Accuracy (Tolerance): **+/- 1-3mm – Final Trim Solution**
- Requires line of sight to the total station & recommended working range up to 150m from the instrument
- 1 Total Station per machine and no direct view to the sky needed for operation
- This system allows the operator to roll the blade +/-15° when trimming (help manage material movement and placement)

MC-Max Grader – Millimeter GPS

- Accuracy (Tolerance): **+/- 5mm – Final Trim Solution**
- Requires line of sight to laser transmitter & recommended working range up to 120m from the instrument
- Multiple machines can run off 1 laser transmitter. Up to 4 lasers can be joined to cover 960m of working area
- Requires clear view of the sky, free from obstructions (buildings, trees, excavations) to track satellites
- Requires a correction to be received from a base station via Radio or Network (this enables the system to obtain 20mm precision)

Dozer Solutions

MC-i4 / MC-R3

MC-Max

MC-Max Dozer – Mastless, GNSS

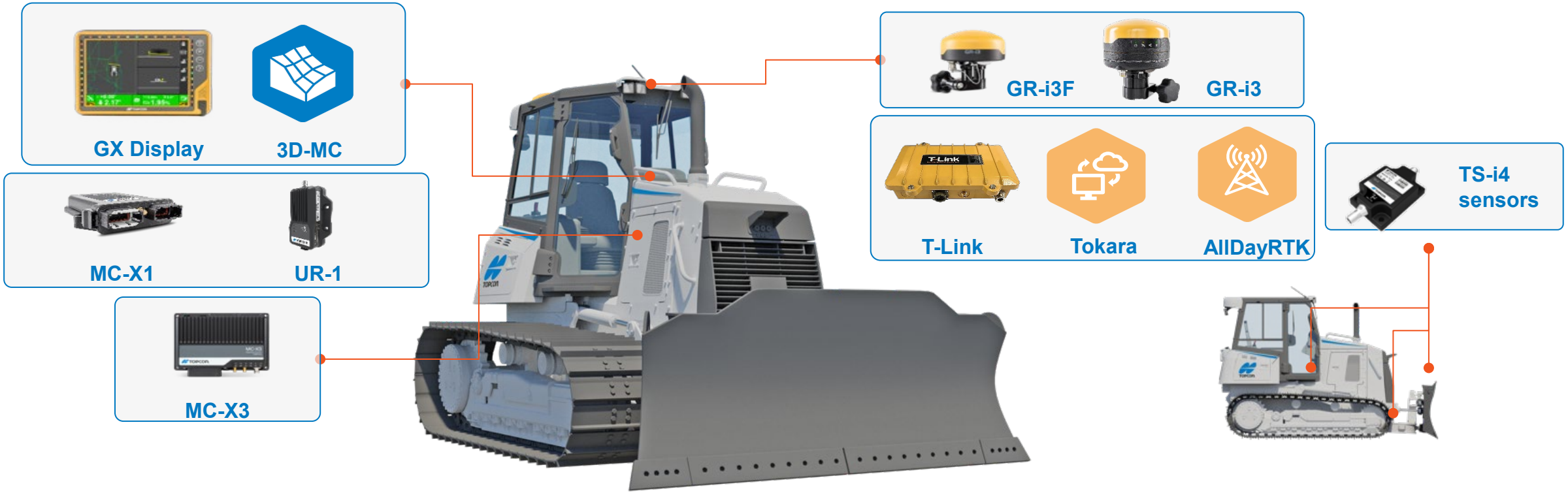

- Accuracy (Tolerance): **+/- 20mm – General Earthworks Solution**
- Requires clear view of the sky, free from obstructions (buildings, trees, excavations) to track satellites
- Requires a correction to be received from a base station via Radio or Network (this enables the system to obtain 20mm precision)

MC-Max Dozer – LPS

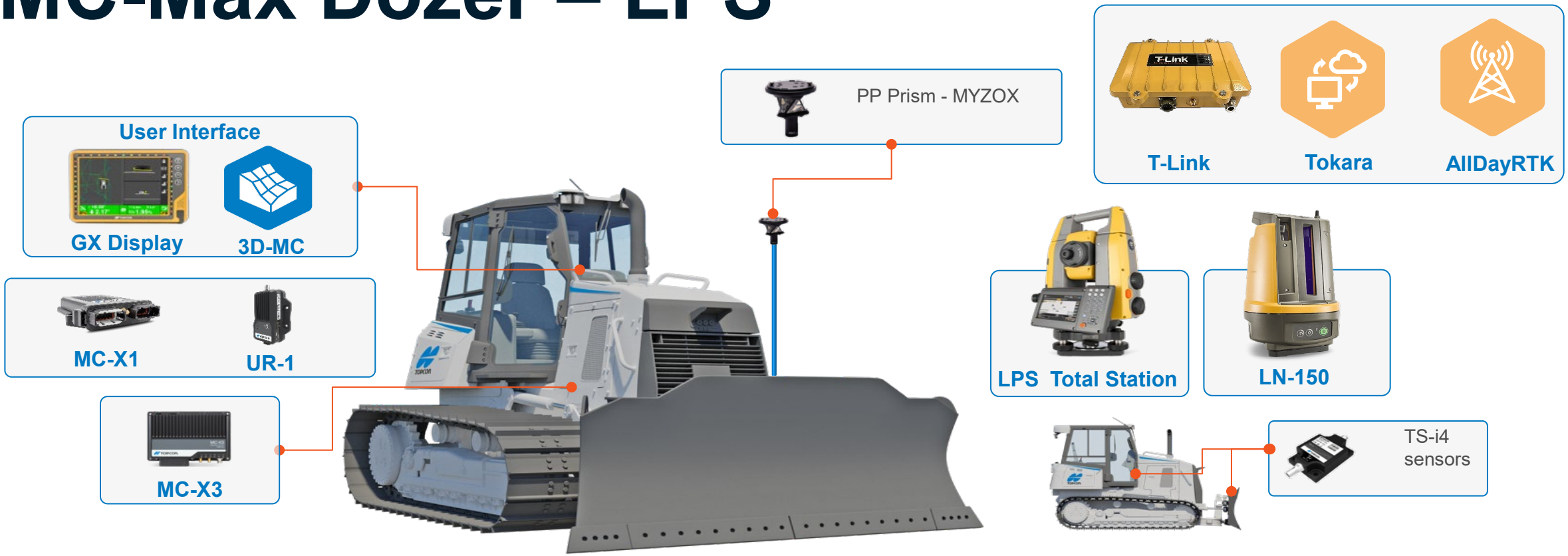

- Accuracy (Tolerance): **+/- 1-3mm – Final Trim Solution**
- Requires line of sight to the total station & recommended working range up to 150m from the instrument
- 1 Total Station per machine and no direct view to the sky needed for operation

Weighing Solutions

Why Weigh?

Up Productivity

- Streamline loading
- Fewer vehicle movements
- Certified “legal for trade” – no weigh bridge required

Improve Fleet Management

- Less wear and tear on vehicles
- Increased safety of not overloading
- Reduced maintenance costs

Minimise Losses

- Only loading what is required
- Full ability to account for products used

What can we fit systems to?

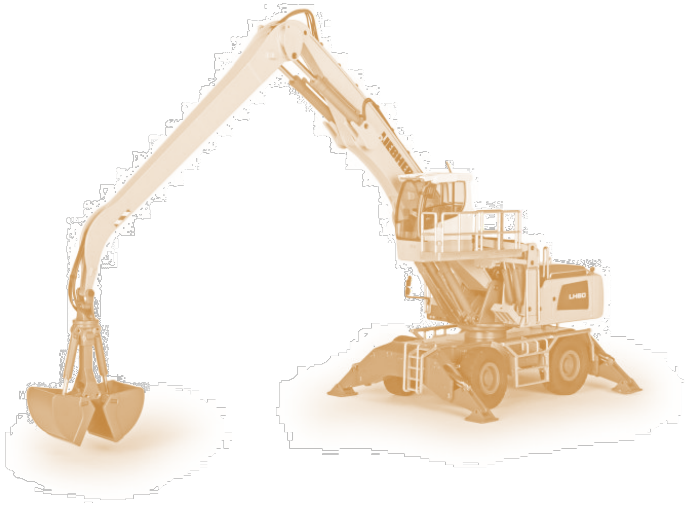

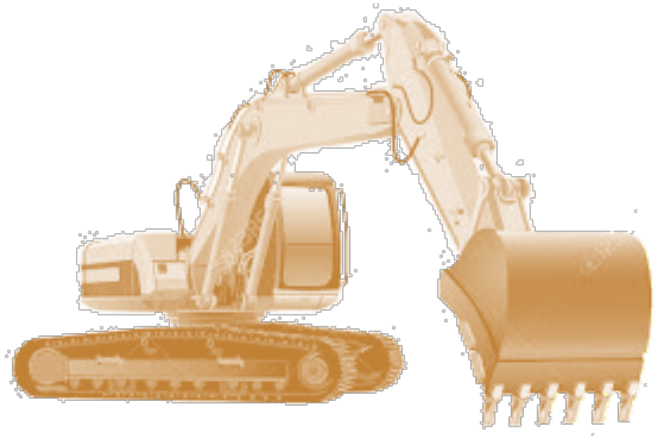

Quarrying

Recycling

Mining

Builder’s Merchants

Forestry

Municipal

Ports

Logistics

Compact Loaders

Loadlog 300+

- Entry level dual hydraulic pressure sensor weighing system
- For loaders with a single attachment
- Printer option
- Check weighing incoming and outgoing goods

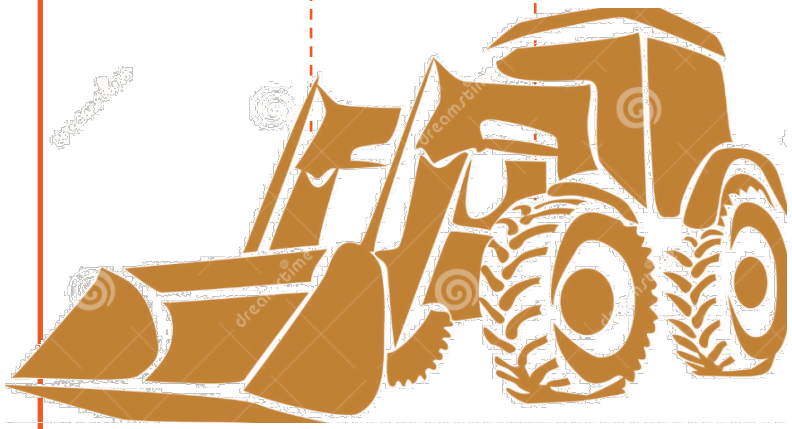

Weighlog a10

- 4.3" colour touchscreen
- Twin hydraulic pressure sensor weighing system
- Printer option
- Communication via SD card and USB memory stick
- Stores database
- Truck & trailer loading and batch blending

Medium – Large Loaders

Loadmaster α50

- Colour touch screen display
- Target load entry
- Printer option
- Slope compensation
- Vehicle loading applications eradicating return trips to stockpile

Loadmaster α100

- New dynamic weighing technology using inclinometers
- SQL database functionality. XML data output via serial, Ethernet & USB
- 4G and Wi-Fi connectivity
- Data management applications
- Legal for Trade (Y(b)) MID

Excavators

Loadex 100

- Cost effective maximising tons per hour performance
- Load correctly first time eradicating return trips to stockpile
- Colour touch screen display
- New dynamic weighing technology using inclinometers
- SQL database functionality. XML data output via serial, Ethernet & USB
- 4G and Wi-Fi connectivity

Material Handlers

Loadmaster α200

- Weighing at any point in the lift range of the machine
- Advanced movement compensation
- Simple installation and calibration
- CAN based system
- High precision, machine specific load cell
- Various weighing modes: Dynamic or Constantly Live Static
- “Pause loading” feature during breaks
- Camera input capability
- Overload alarm
- SQL database functionality. XML data output via serial, Ethernet & USB
- 4G and Wi-Fi connectivity

BLIND SIGHT

THE NEW STANDARD IN SAFETY

Stop accidents | automate safety reporting
Video of every detection | lead safety metrics

Presien

Highly mobile machines with significantly obscured rear vision

BPU

Sensor

In-cab alert

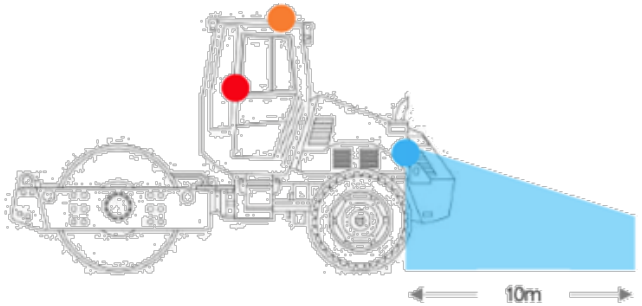

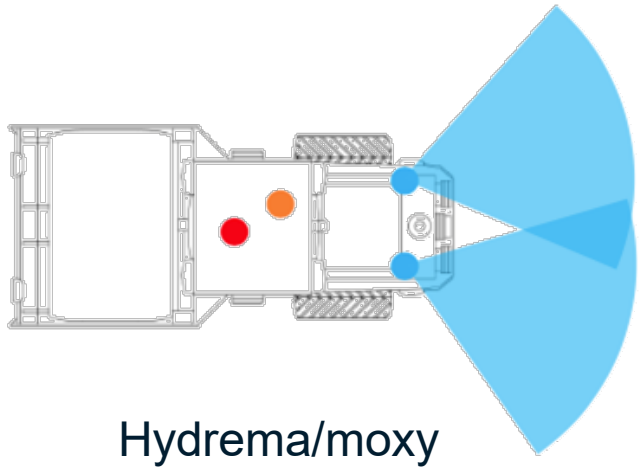

Hydrema/moxy

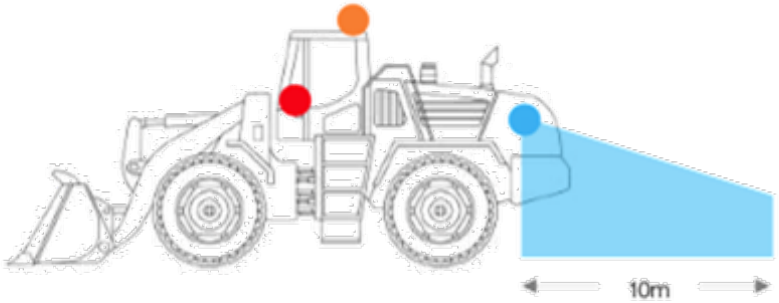

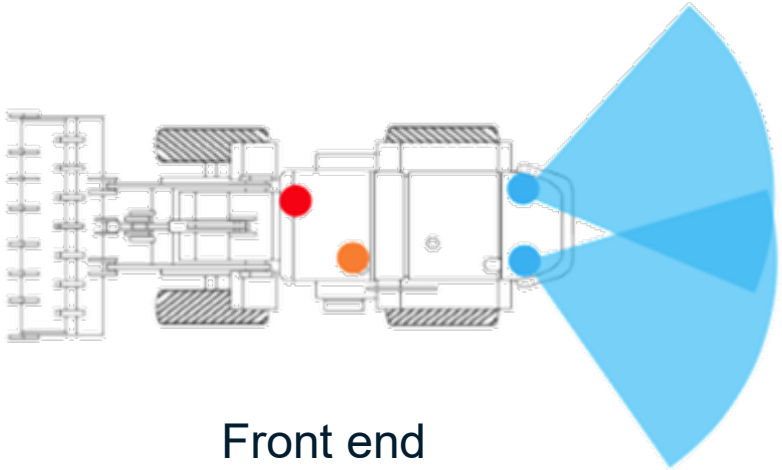

Front end loader

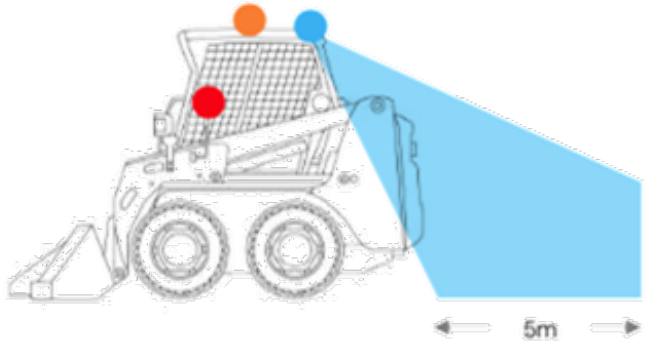

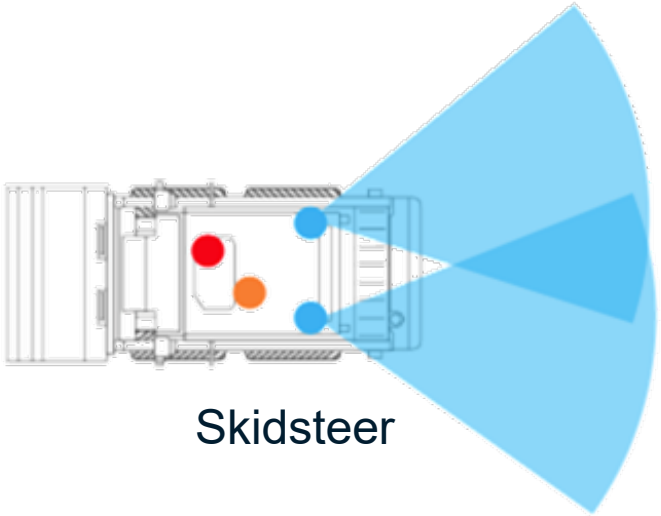

Skidsteer

People entering rear hazard zones

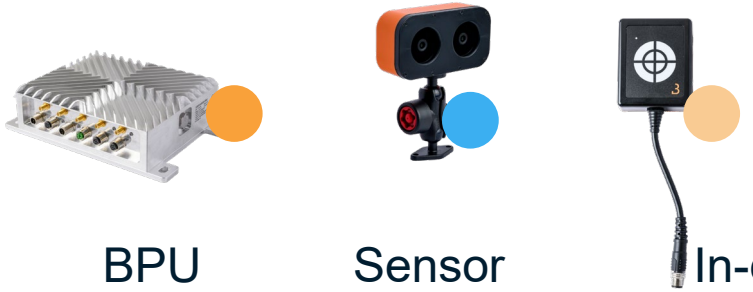

BPU Sensor In-cab alert

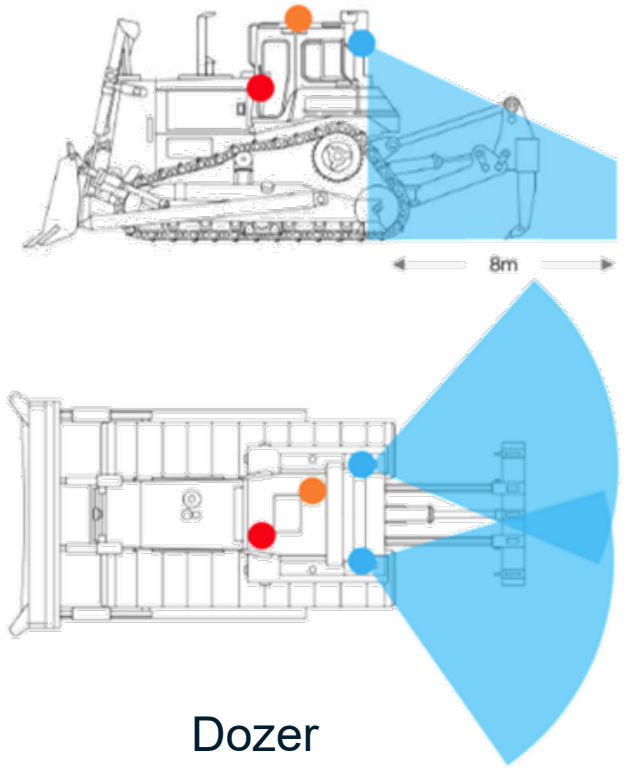

Dozer

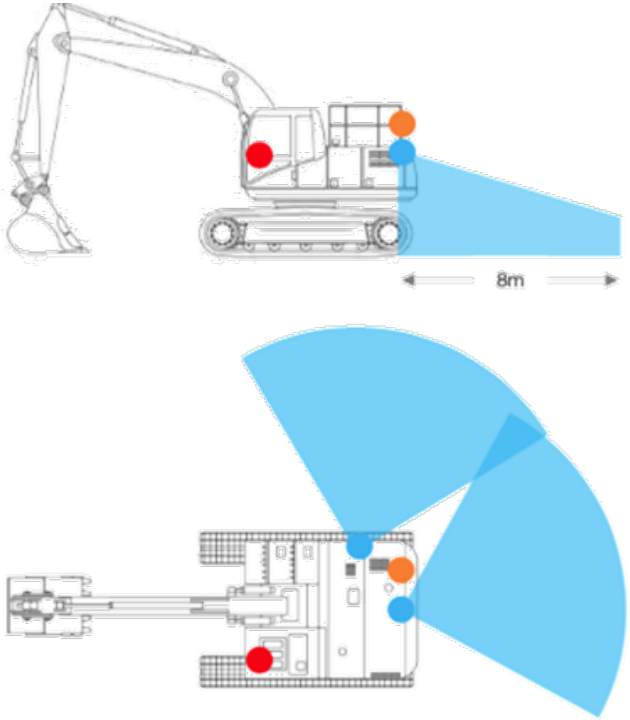

Excavator >10t

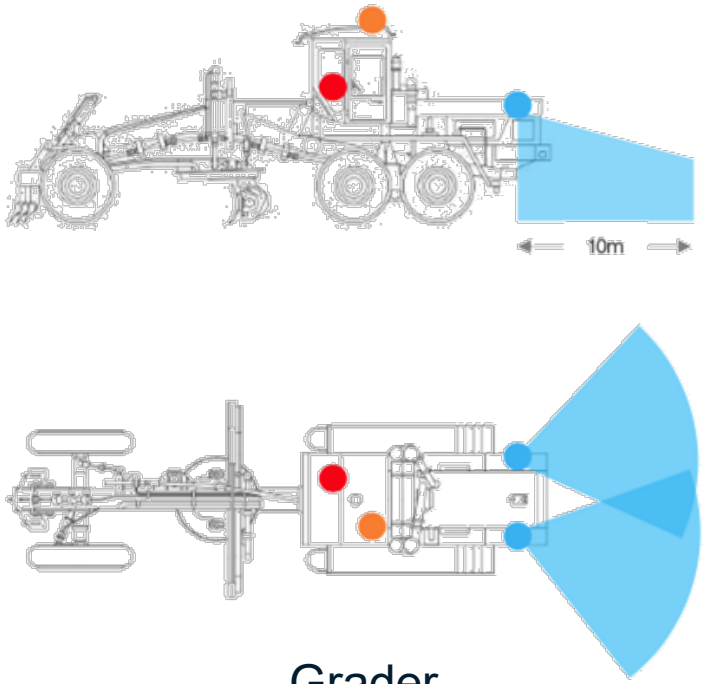

Grader

People entering rear hazard zones

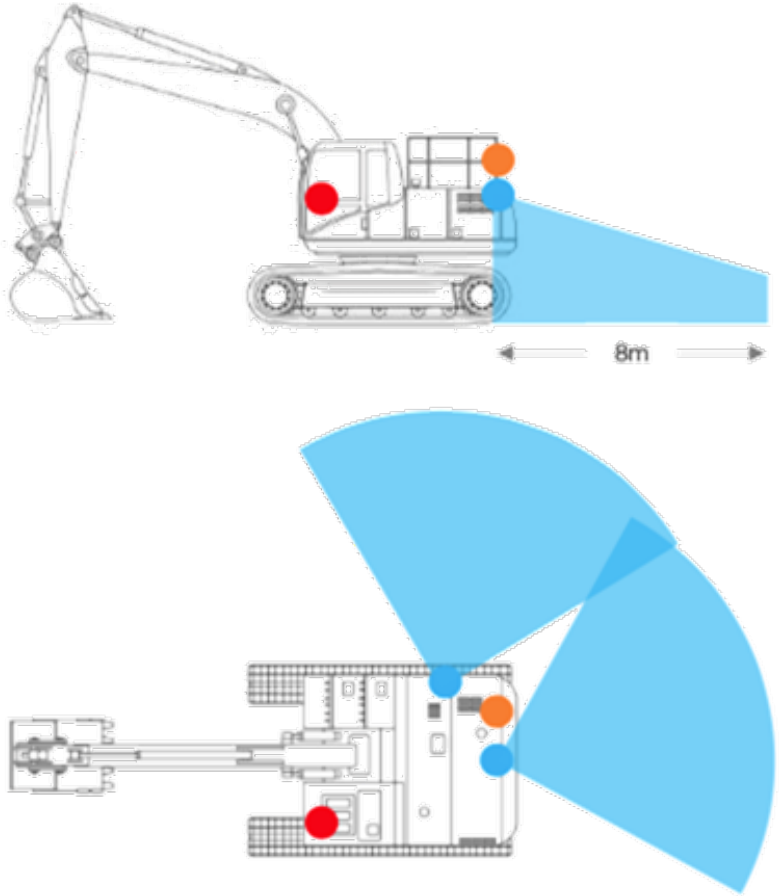

Excavator >10t

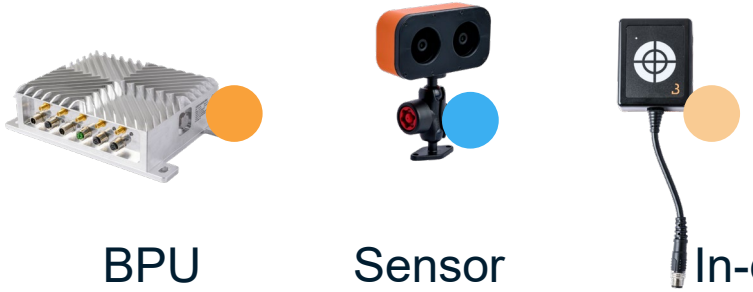
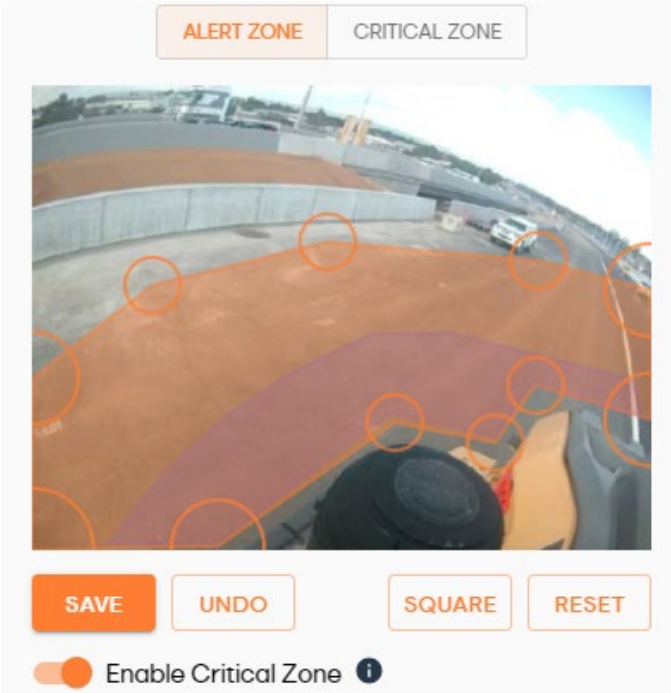
BPU Sensor In-cab alert