Preventative Maintenance Training

Aptella
AUTOMATION + POSITIONING TECH

MC-Max Systems

Common areas that require daily attention to avoid problems

By training yourself to regularly look over these areas, you can often avoid issues and costly downtime

Excavator			
UHF & Network Antennas on roof of cab	TS-i4 Sensors & CAN Cables	GPS Antenna Mounts	TEE Piece & CAN Cable Parker

Topcon 3D Excavator System

Topcon MC-Max Indicate Excavator

Topcon MC-Max Auto Excavator

MC-Max Excavator

GR-i3F

GR-i3

valve controller and joystick

MC-X1

UR-1

MC-X3

TS-i4

GX-90 Display

3D-MC

U-Link

Tokara

AllDayRTK

Excavator Components

Tilt Sensors are permanently mounted to the machine. These **cannot** be removed from the machine without the need for re-calibration

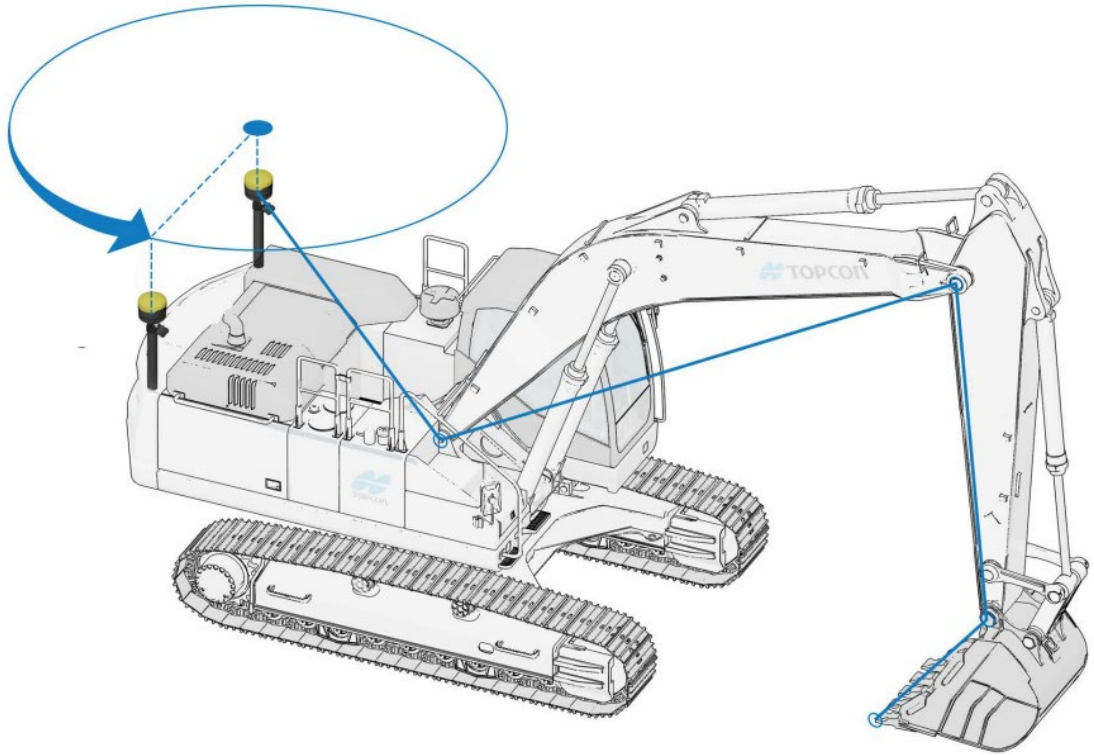

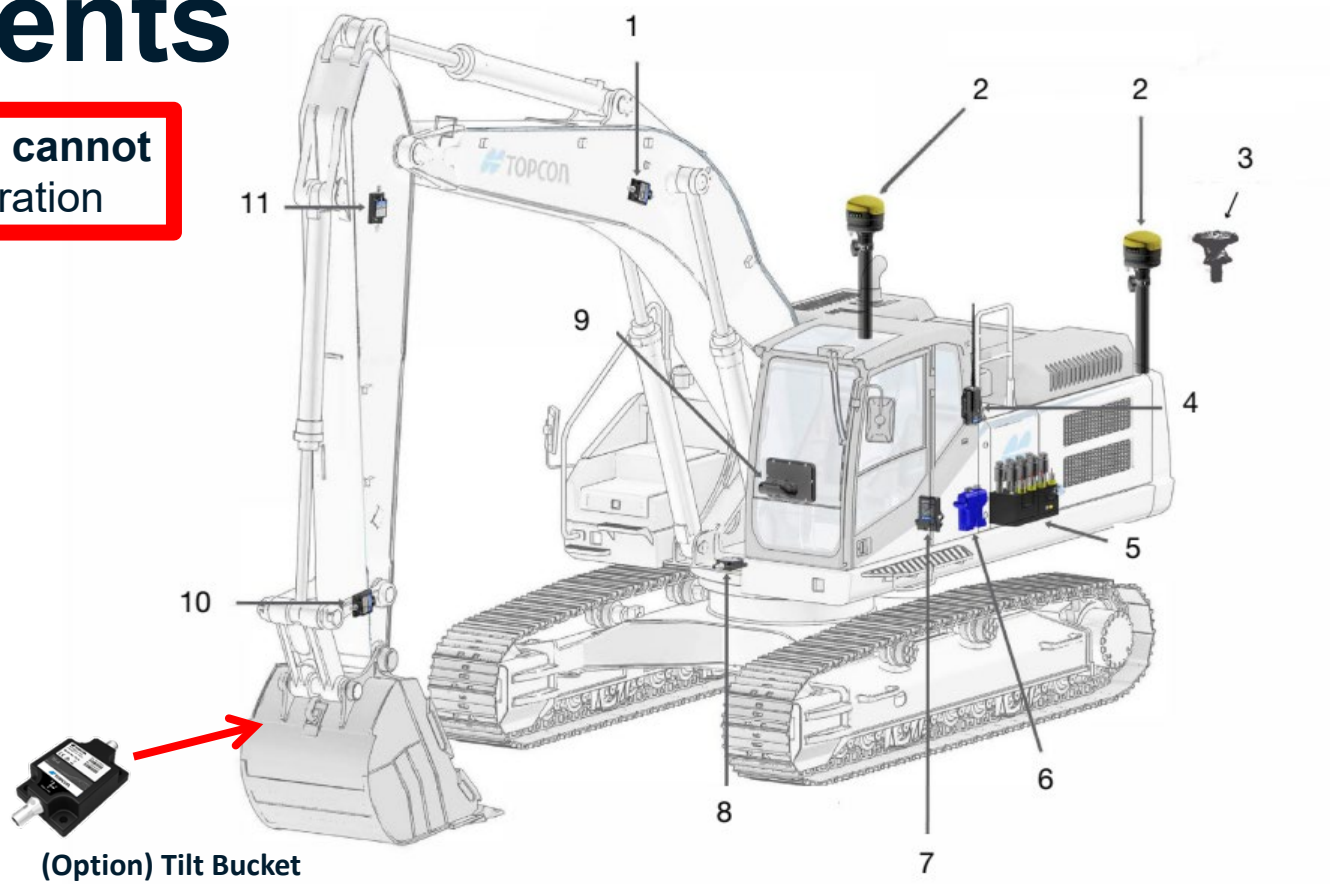

1	TS-i4 Sensor - Boom	2	GNSS Receiver	3	Machine Control Prism	4	Radio Module
5	Control Manifold	6	Danfoss Controller	7	MC-X1 Controller	8	TS-i4 Sensor - Body
9	GX-Series Display	10	TS-i4 Sensor - Dog Bone	11	TS-i4 Sensor - Stick		

Tilt Sensors are mounted on each moving part so that the system knows where the bucket is in relation to the antennae

Excavator Schematic

Part numbers described below are based on a generic kit. Machines are commonly customised with bespoke components and cables.

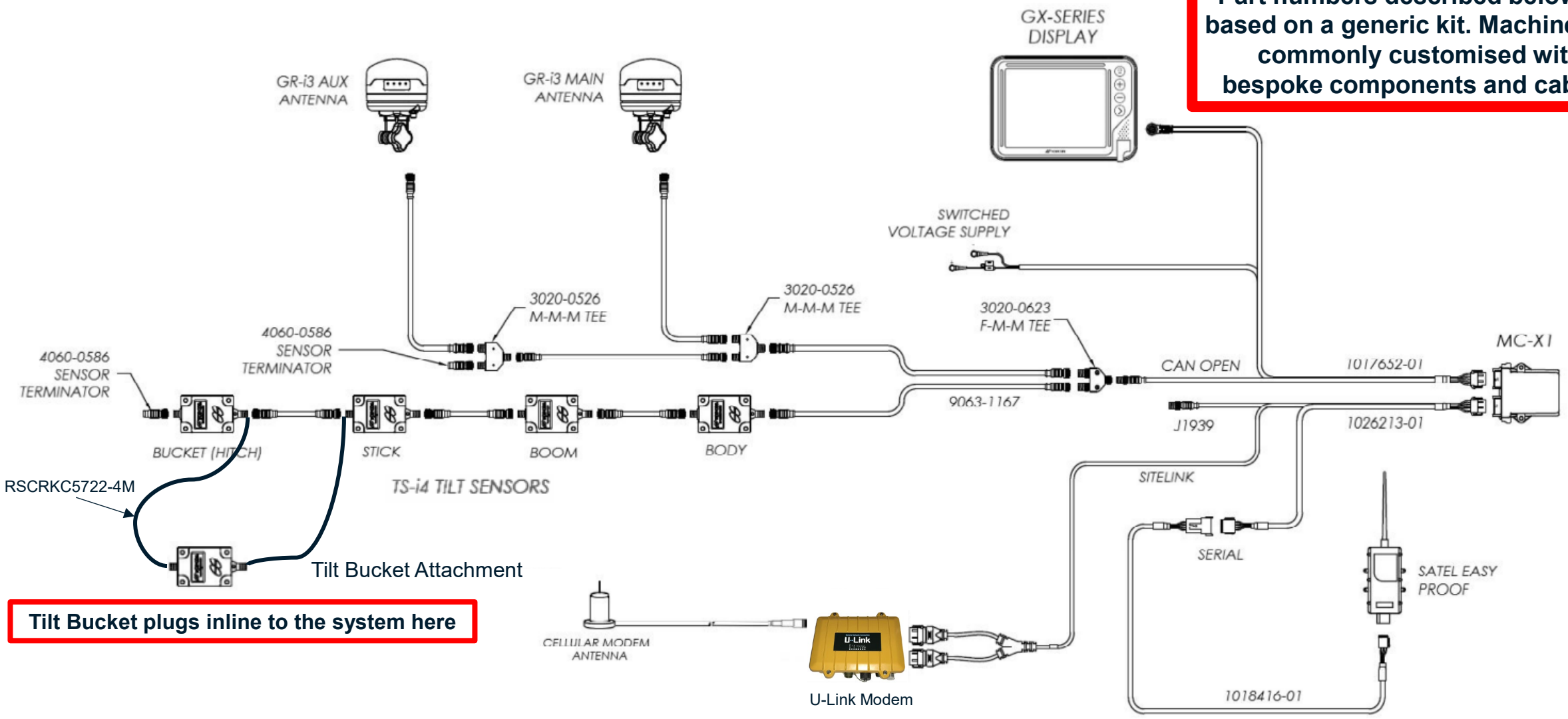

Tilt Bucket plugs inline to the system here

(Excavator) UHF & Network Whip/Stubby Antennas

Location	Mounted on top of the cabin roof towards the back
Description	Magnetic base with screw on antennas (UHF – Long Antenna, Network – Short Stubby Antenna)
Checks ✓	Ensure cable going into magnetic base are secure and antennas aren't bent or damaged

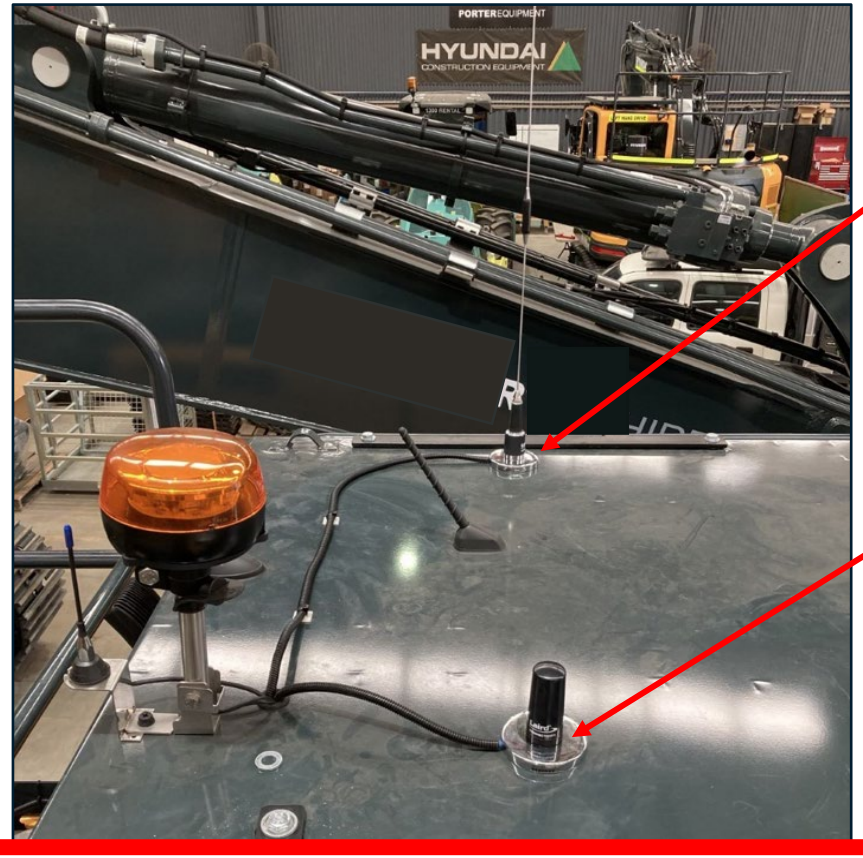

UHF Long Whip & Magnetic Base (RED tape identifies UHF)

Network Short Stubby Antenna & Magnetic Base (BLUE tape identifies Network)

LED Light

Antenna spacing is important to optimise machine connection to a base station. Consider competing communication signals between onboard machine UHF antennas & LED lights when positioning your machine control antennas on the roof of the cab.

(Tip) Aptella recommends each system antenna to be greater than 300mm apart

(Excavator) TS-i4 Sensors & CAN Cables

Location	Mounted on all parts of machine working equipment & body (Body, Boom, Dipper Arm, Hitch or Dogbone, Tilt Bucket)
Description	TS-i4 sensor mounted on a bracket with CAN cables connected on either end
Checks ✓	Ensure there is no physical damage to TS-i4 sensor and cables. Check locking ferrule and cable connection into TS-i4 sensor is tight

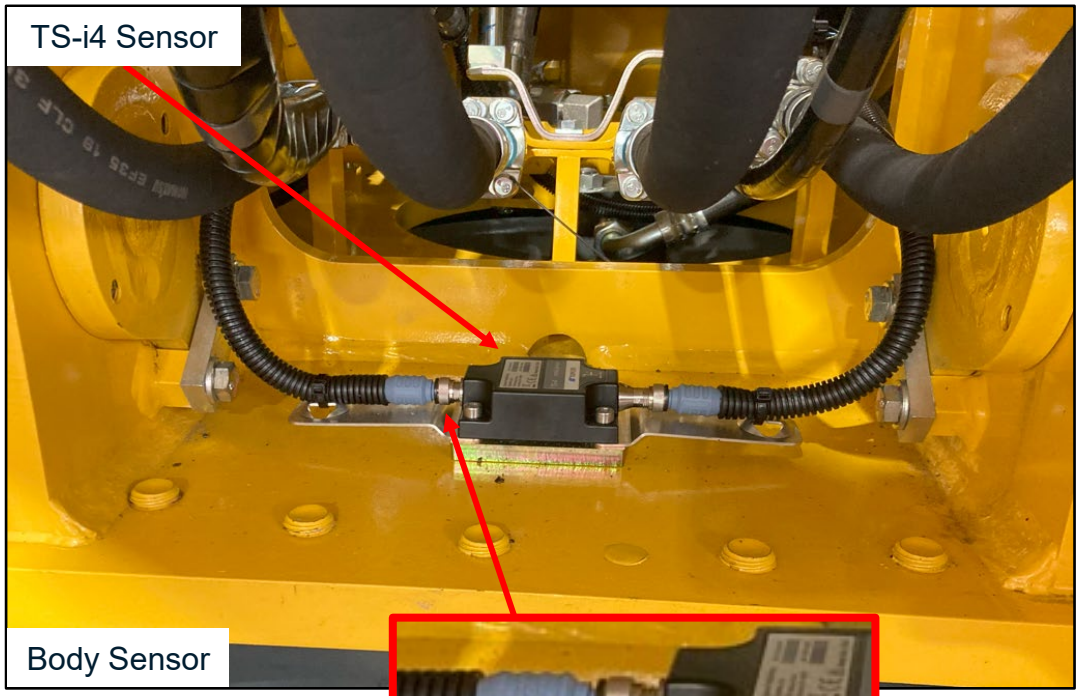

Ensure dielectric grease has been applied into the CAN connectors

Locking Ferrule/Ring

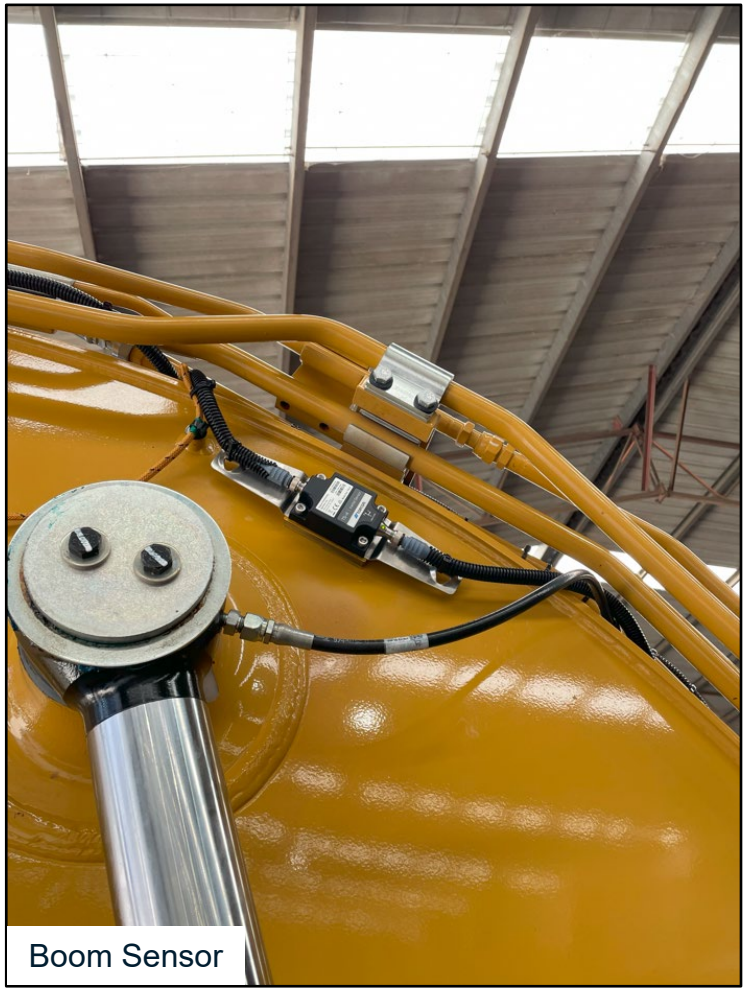

Boom Sensor

Dipper Arm Sensor

(Excavator) TS-i4 Sensors & CAN Cables

CAN cable mechanical protection placed along cable for extra protection

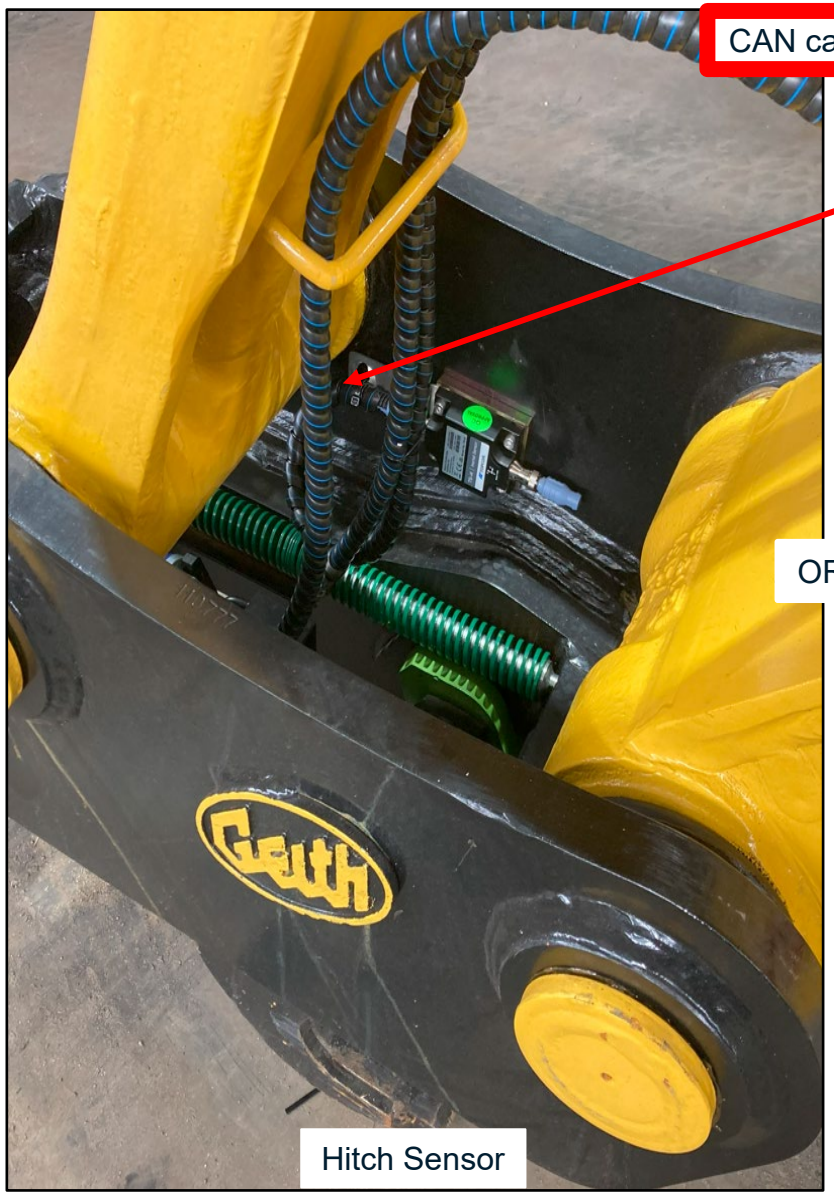

Hitch Sensor

OR

Tilt Hitch Sensor

(Excavator) TS-i4 Sensors & CAN Cables

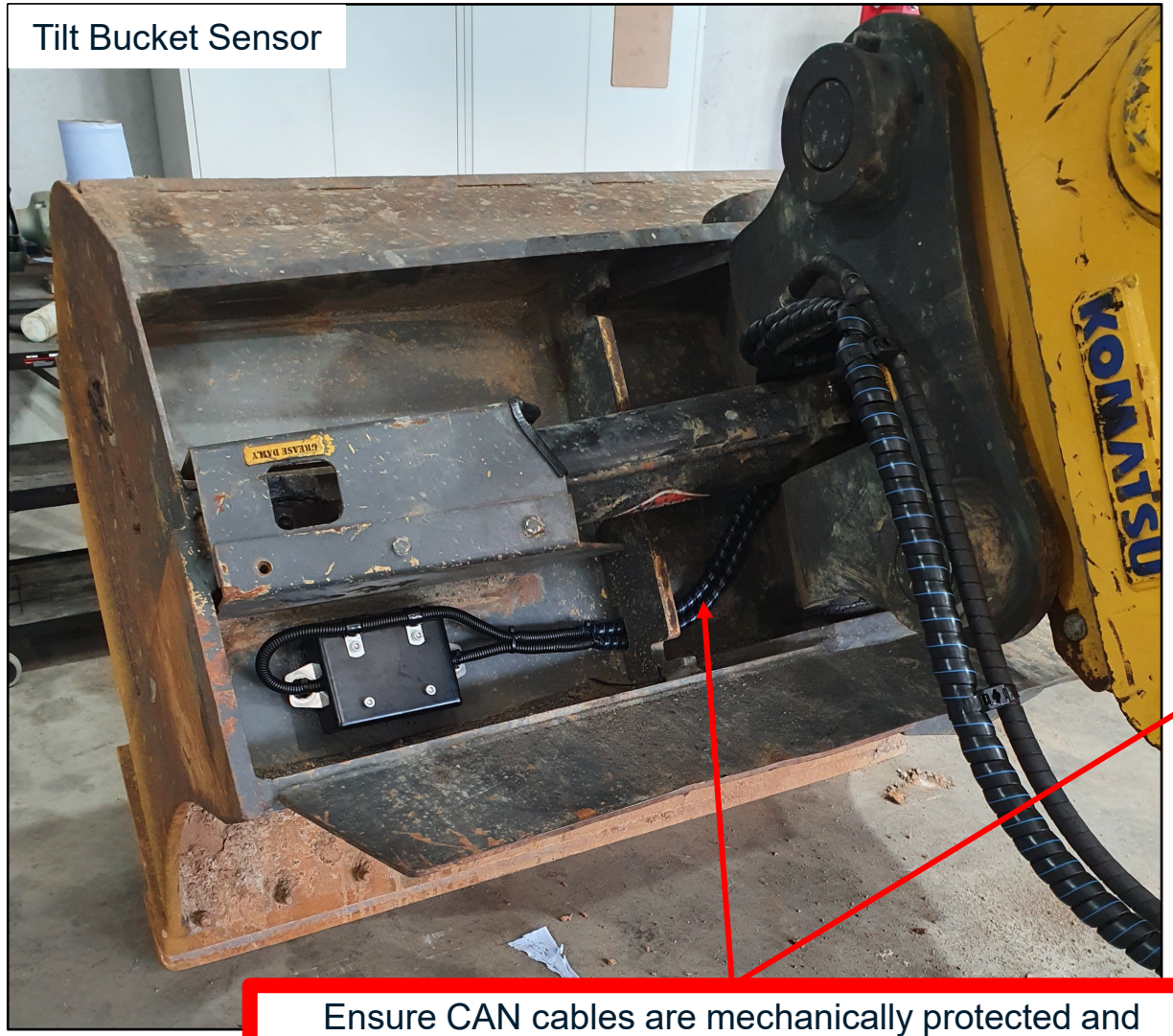

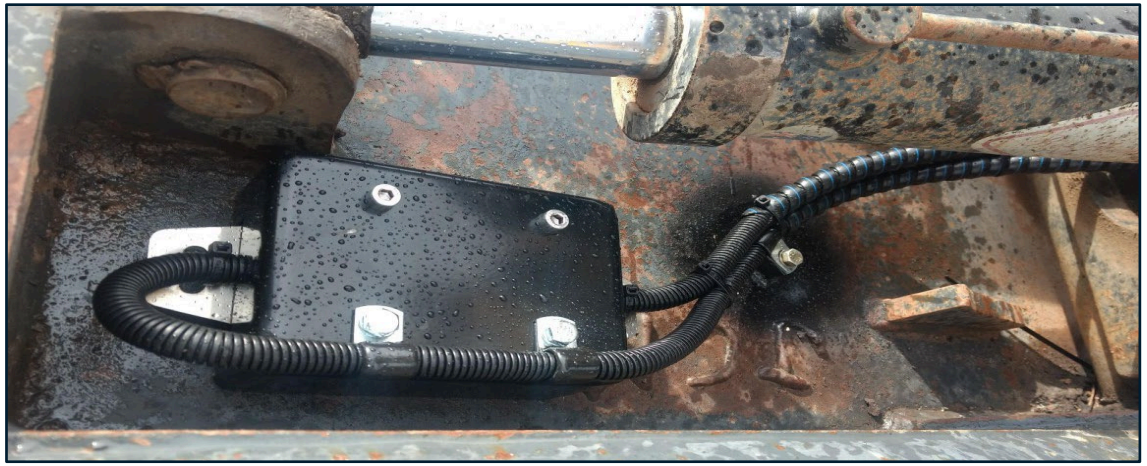

Ensure CAN cables are mechanically protected and routed so that they are not pinched when the bucket is tilting (P-Clamps & following hydraulic lines)

(Excavator) GPS Antenna Mounts (Handrails/Poles)

Location	Mounted on top of the handrails (Handrail Mounts) or mounted to the back of machine if handrails aren't suitable (Pole Mounts) either side on the back of machine
Description	Short stubby steel extension (Handrail Mount) Long steel pole extension from machine deck (Pole Mount) to mount a GPS antenna
Checks ✓	Ensure handrails or GPS Poles aren't bent, lose or damaged. If the pole or handrail has been moved it will void the calibration and cause error to GPS position

AUX GPS Antenna (other side of cab) | MAIN GPS Antenna(behind cab)

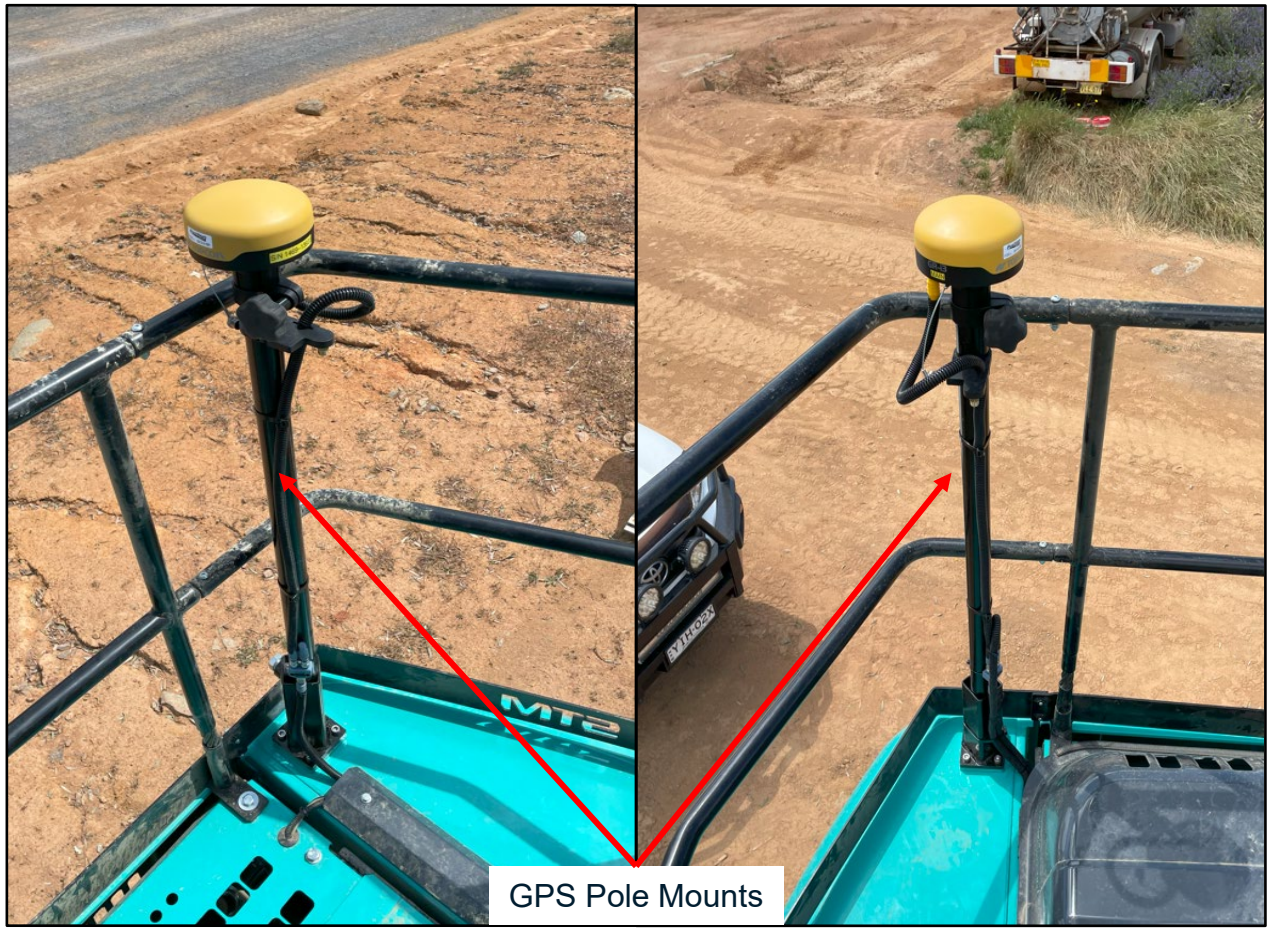

(Excavator) TEE Piece & CAN Cable Parker

Location	Mounted on the back of machine, along handrails or pole mounts and connects into the GPS Antennas
Description	Three-way CAN junction (TEE piece) and GPS CAN cable used to connector to AUX & MAIN GPS Antenna
Checks ✓	Ensure the CAN cables are secured in the cable parker. Make sure the TEE piece is firmly mounted on the machine, free from vibration

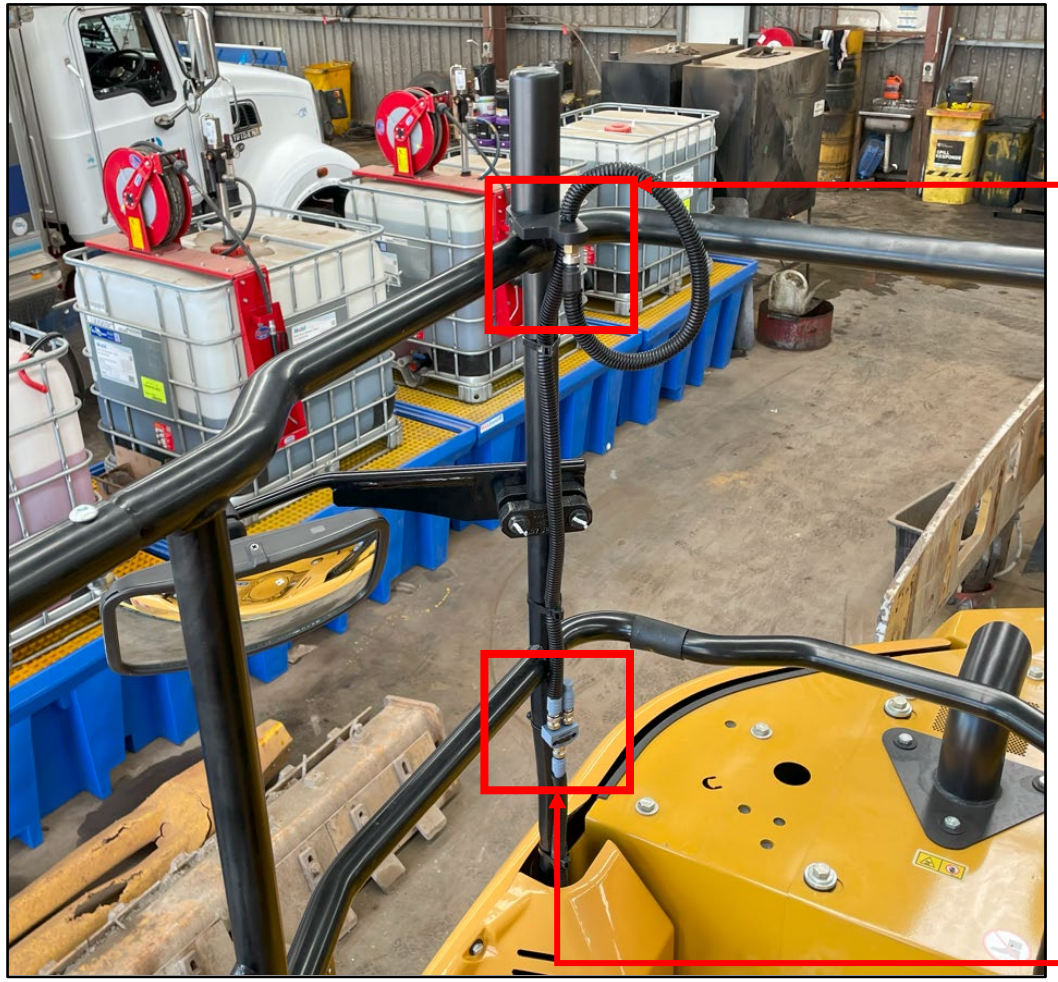

Ensure CAN cables are secured in the cable parker when not plugged into the GPS antenna. This reduces debris and keeps moisture out of the connector.

Ensure TEE Piece is firmly secured to the machine (along handrail or mounted to machine) with locking ferrule and cable connection tight. TEE piece needs to be free of vibration.

Commonly Used Excavator Parts…

Part Number	Description	Where the Part is Used…
PP-B4505CNR	UHF Whip Antenna	Mounted on **top of the cabin roof towards the back**. Long Whip Antenna that screws onto a magnetic base
PP-3G/4G/5G	Network Stubby Antenna	Mounted on **top of the cabin roof towards the back**. Short black Stubby Antenna that screws onto a magnetic base
CS-MAGBASE	Universal Magnetic Base for screw on antennas (UHF/Network)	Mounted on **top of the cabin roof towards the back**. UHF & Network Antennas screw onto the magnetic base, with the cable running into the cab
9063-1167-5	5M M12 CAN Cable F/F	Commonly routed from the **Boom to Dipper Arm TS-1 sensor** (dependent on machine size)
9063-1167-3	3M M12 CAN Cable F/F	Commonly routed from the **Dipper Arm to Hitch/Dogbone TS-1 sensor** (dependent on machine size)
RSCRKC5722-4M	4M M12 CAN Cable F/M	Commonly routed from the **Dipper Arm to Tilt Bucket TS-1 sensor** (dependent on machine size)
4060-0586	CAN Terminator	Fitted to the **last TS-i4 sensor in the CAN line or AUX GNSS antenna tee piece**. Generally, either the Dogbone or Hitch sensor.
3020-0526	Tee Piece M12 Y-Connector M-M-M	Located on the **back of the machine (Handrails/poles).** A CAN junction that needs to be mounted securely with no vibration
1041038-01	1M CAN Cable (Yellow)	**Fitted to the Tee Piece on the back of the machine** and connected to the GPS antenna. This is the most common component to be damaged when taking GPS antennas on/off **(AUX)**
1041040-01	1M CAN Cable (Black)	**Fitted to the Tee Piece on the back of the machine** and connected to the GPS antenna. This is the most common component to be damaged when taking GPS antennas on/off **(MAIN)**
LBM570-2	Control Box Touch Screen Protector	Used on the **touch screen of the GX-60/GX-55/GX-75**
RAM-101U	Control Box Ram Mount Base	(Ram ball base and extension arm) Fitted inside the cab for the Control box to be mounted
CS-FME-TNC (UHF) **CS-FME-N (Network)**	Screw on in-cab UHF & Network Connectors	Alternative connectors (used on newer machine installs) on the **end of the UHF & Network Antenna cable** coming from the roof inside the cab. These cables plug into the rover box (UHF) and U-Link Modems (Network)

Part numbers noted above may change over time or be superseded, however the description will rarely change when requesting parts from an Aptella Representative